DRAWING MADE IN AMERICAN PROJECTION

NUMBER C-165410-E

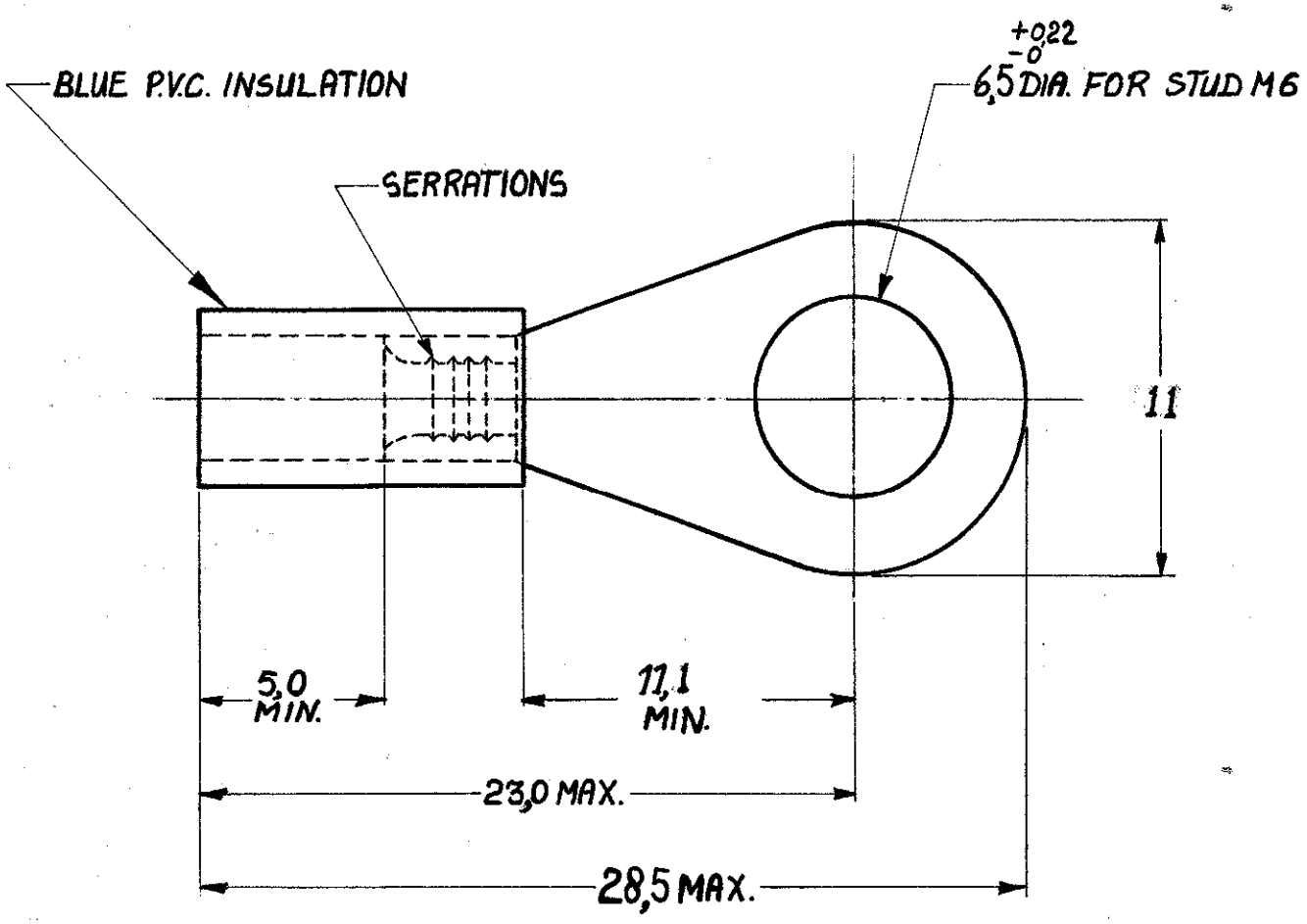

TONGUE MATERIAL THICKNESS: 0,8

ORDER NO.	MATERIAL	PLATING
165410	COPPER	TIN

DR R. Visser 2/11-80 DATE | DE DATE

CHK DATE | APP 6/11-1970 DATE

CUSTOMER COPY FOR REFERENCE ONLY

©1970 BY AMP-HOLLAND N.V. ALL RIGHTS RESERVED A-MP PRODUCTS COVERED BY PATENTS AND/OR PATENTS PENDING.

AMP-HOLLAND N.V.
's-HERTOGENBOSCH
HOLLAND

WIRE-RANGE	INSUL.-RANGE	TYPE
1,5-2,5 mm²	3,9 DIA.MAX	DIN PLASTI-GRIP

SCALE	LOC	SIZE	NO	REV
4:1	H	A	C-165410-E	D

NAME INSULATED RINGTONGUE for stud M6

REV B 30-8-85

DIMENSIONS IN M.M. DO NOT SCALE PRINT

AMP 1252